ELECTRIC PUMPS

HYDROLUTION®
INTEGRATED HYDRAULIC SOLUTIONS. ASIA FORCE

EP5100D

EP5100DS

EP5100 SERIES

ELECTRIC DRIVEN HYDRAULIC PUMP

10 HP, 3 PHASE, 380V

MAX PRESSURE: 10,000psi/700Bar

EP5100

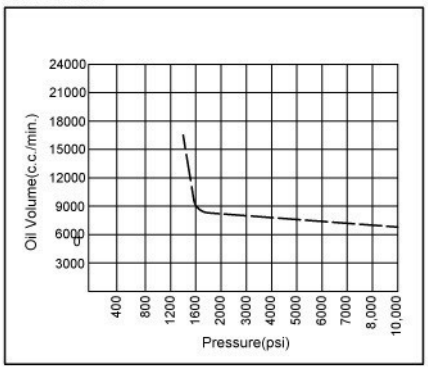

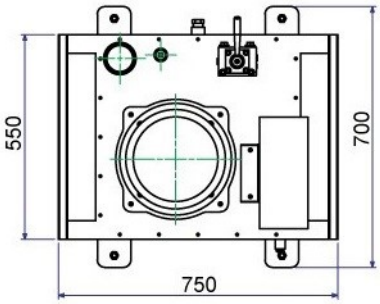

FEATURES

- Dual-speed high output pump delivers up to 16 l/min of oil.
- Low noise level of 73 - 80 dBA.
- Pump prewired at factory with 7.46kW, 380V, 50 Hz, 3 phase universal brushless motor.
- 24 volt control circuits on units with remote controls for user/operator safety.
- 3 phase motor with thermal overload protection and has all the electric components necessary to operate the pump.
- Power switch are 24 volts. EP5100D has a 4-way/3-position manual valve. EP5100DS has a 4-way/3-position solenoid valve with a 24 volt remote switch.
- 100L (80L usable) reservoir has a low oil level sight gauge.

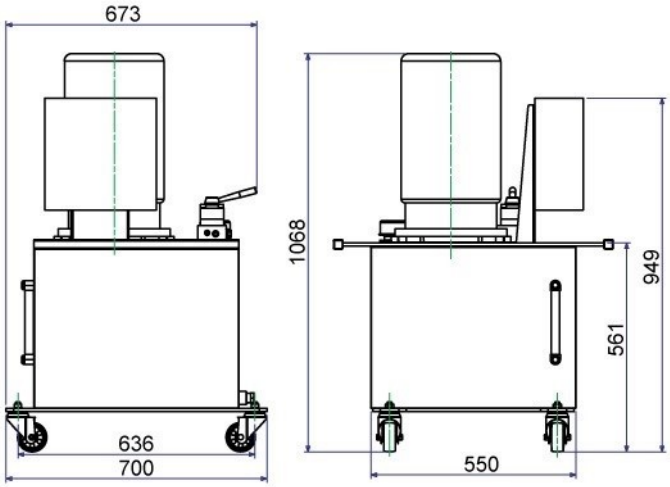

10 HP Electric Pumps - 700 bar

Model No.	Reservoir Capacity (l)	RPM	Motor	Max. Pressure Output (psi)	Amp Draw at 10000 psi	Oil Del.(l/min at..)			
						100(psi)	1000(psi)	5000(psi)	10000(psi)
EP5100D EP5100DS	100	1437	7.46kW 380V 50 Hz, 3 phase	10,000	6	16	14	6	5.6

Model No.	RPM	Reservoir Capacity (l)	Motor	A (mm)	B (mm)	C (mm)	D (mm)	E (mm)	F (mm)	Weight W/O Oil (kg)
EP5100D	1437	100	7.46kW 380V 50 Hz, 3 phase	1068	700	700	561	550	636	232
EP5100DS										241